Duo inner mountingset Type III (Type 21)

Rofix duo standpipe set Inner mounting III (Type 21)
For mounting between the panels.
For panel as well as for compact radiators.

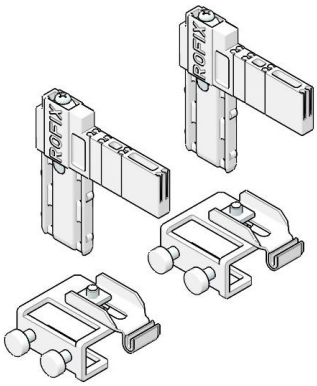

General information

Product ID	40001606
GTIN	5413574277535
Manufacturer name	Rofix
Brand name	ROFIX
Product in stock	No
Net length	0.285 m
Net width	0.195 m
Net height	0.15 m
Net weight	0.224 kg
Net volume	8.336 m³
REACH indicator	Does not contain any SVHC in excess of 0.1% product weight

Ordering information

Order unit	Piece
Minimum quantity	12