Double pipe clamp PE Ø35mm CD=65mm +S120

For vertical fixing/mounting of galvanized tubes against the wall.
Supplied with Rofix mounting bolt M8

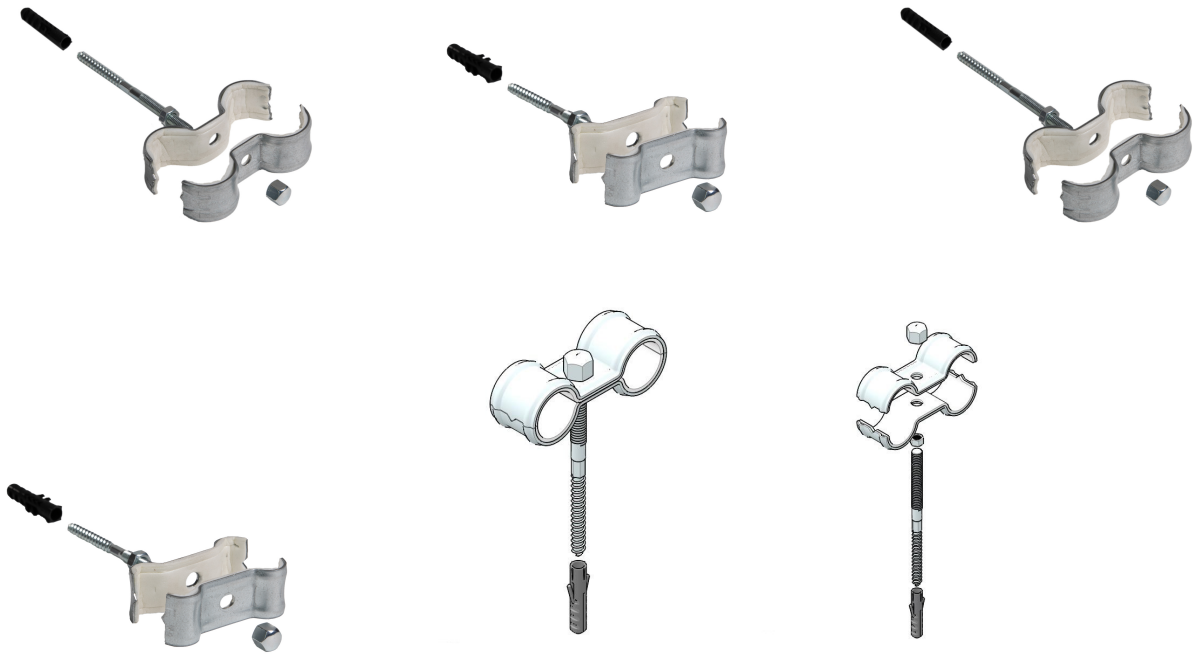

General information

Product ID	40000746
GTIN	5413574088292
Manufacturer name	Rofix
Brand name	ROFIX
Product in stock	No
Net length	0.51 m
Net width	0.26 m
Net height	0.14 m
Net weight	0.149 kg
Net volume	18.564 m³
REACH indicator	Does not contain any SVHC in excess of 0.1% product weight

Ordering information

Order unit	Piece
Minimum quantity	50