Double metal floor clamp Ø35mm

User-friendly mounting of tubes/pipes on the floor.
Ideal for fixing with nail guns.

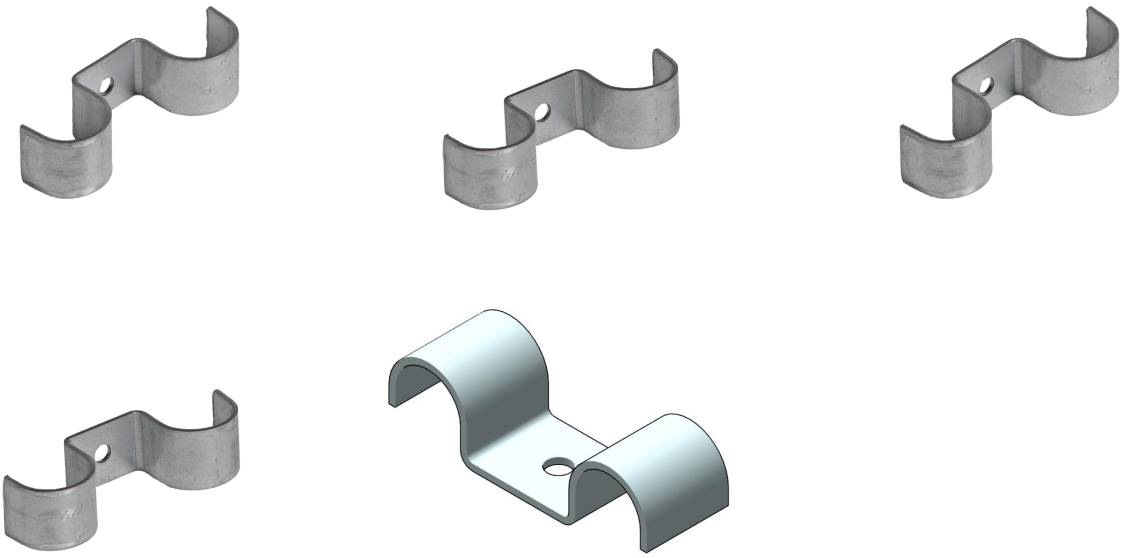

General information

Product ID	50000640
GTIN	5413574253997
Manufacturer name	Rofix
Brand name	ROFIX
Product in stock	No
Net length	0.205 m
Net width	0.142 m
Net height	0.17 m
Net weight	0.045 kg
Net volume	4.949 m³
REACH indicator	Does not contain any SVHC in excess of 0.1% product weight

Ordering information

Order unit	Piece

Minimum quantity	50