Double pipe clamp PE Ø22mm CD=52mm +S100

For vertical fixing/mounting of galvanized tubes against the wall.
Supplied with Rofix mounting bolt M8

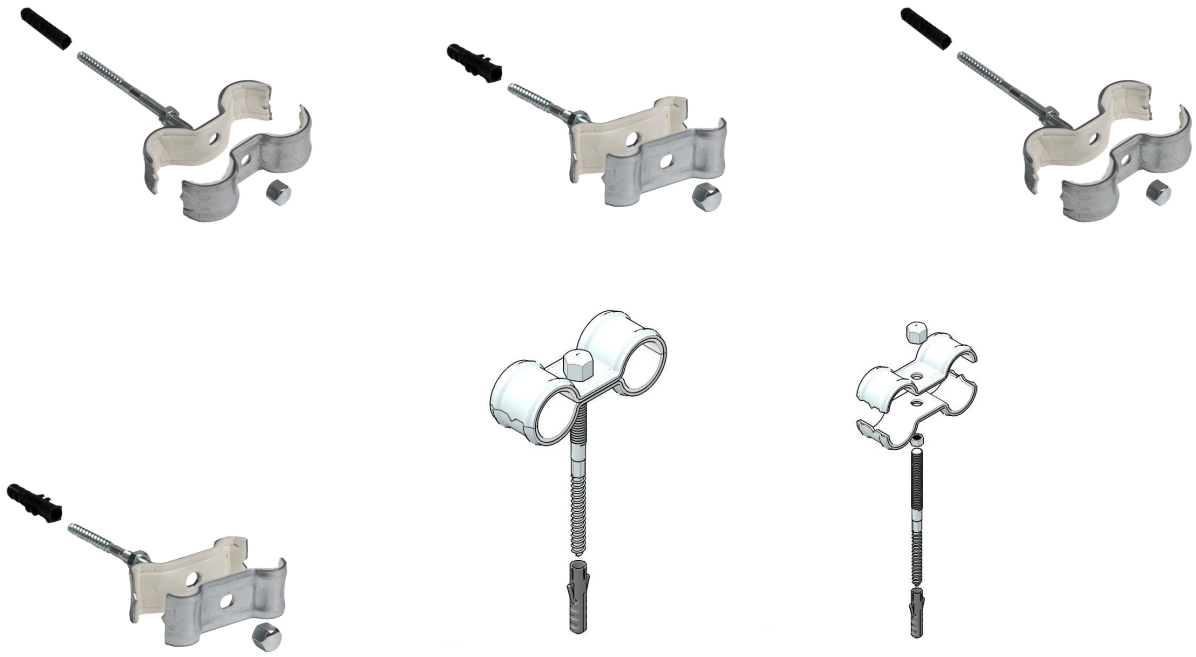

General information

Product ID	40000753
GTIN	5413574088186
Manufacturer name	Rofix
Brand name	ROFIX
Product in stock	No
Net length	0.26 m
Net width	0.215 m
Net height	0.21 m
Net weight	0.111 kg
Net volume	11.739 m³
REACH indicator	Does not contain any SVHC in excess of 0.1% product weight

Ordering information

Order unit	Piece
Minimum quantity	50